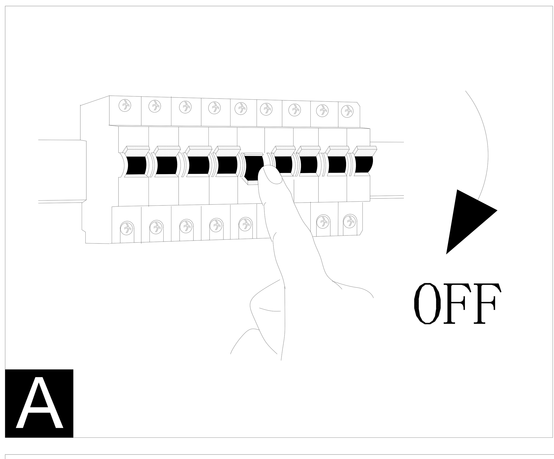

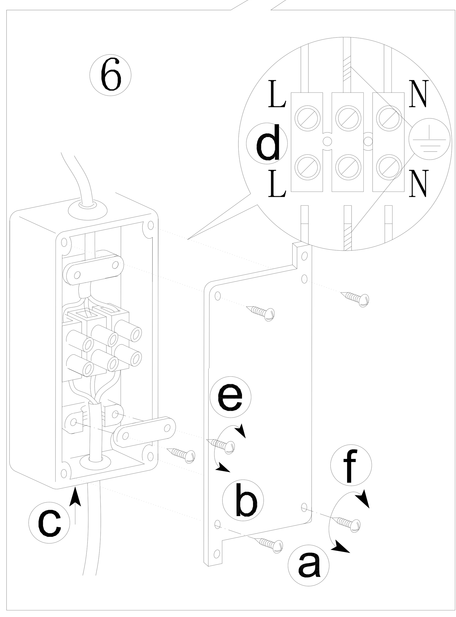

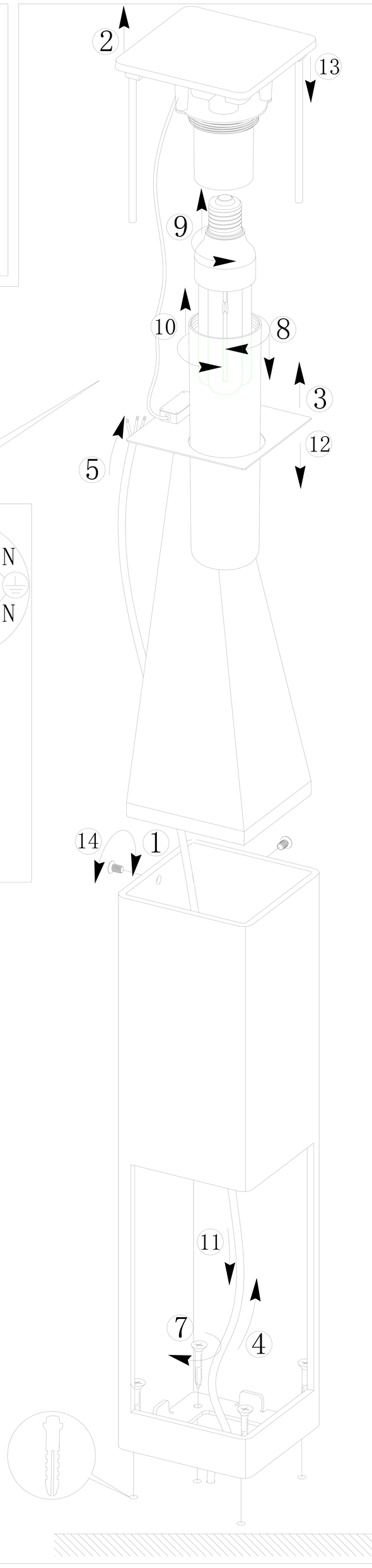

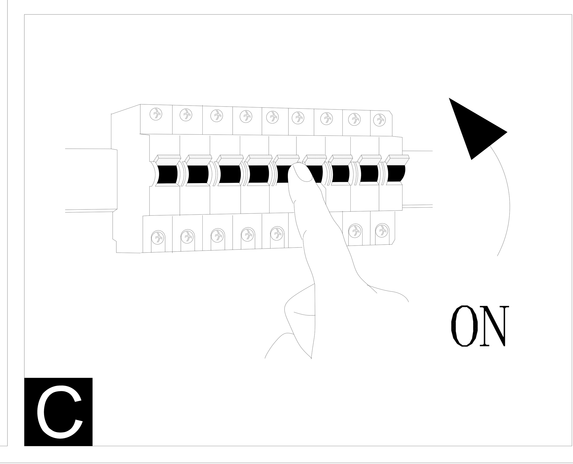

BLA89657